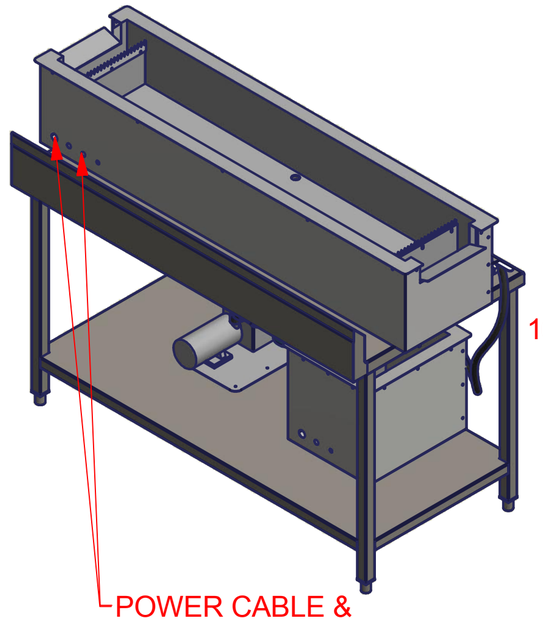

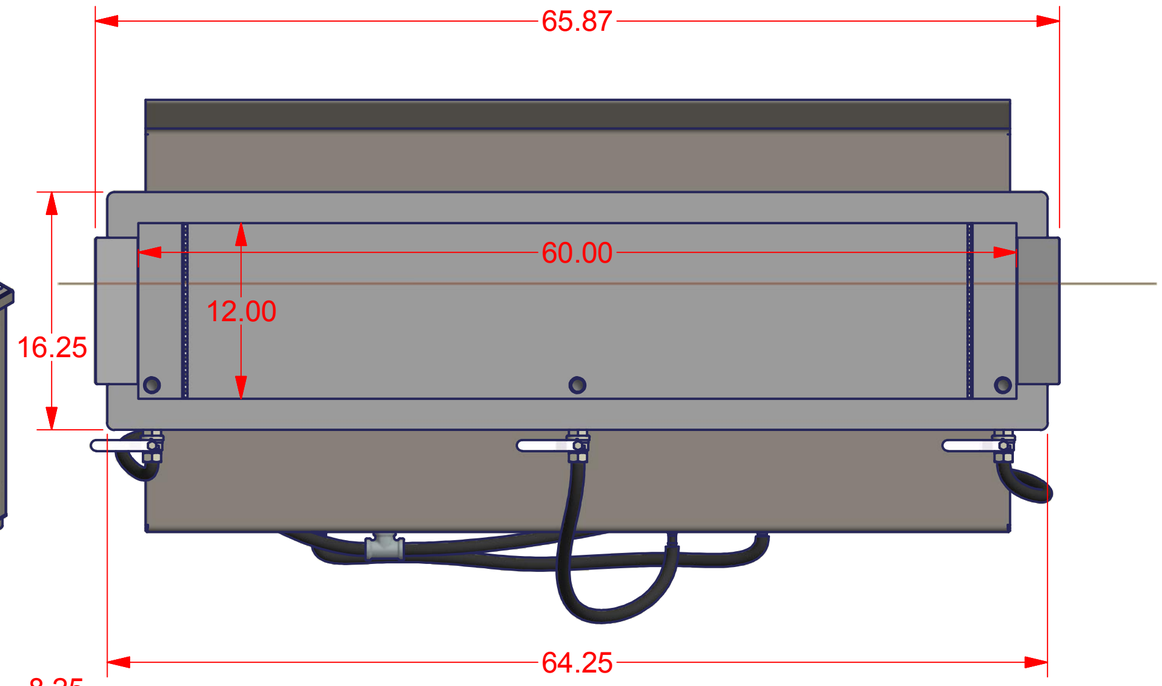

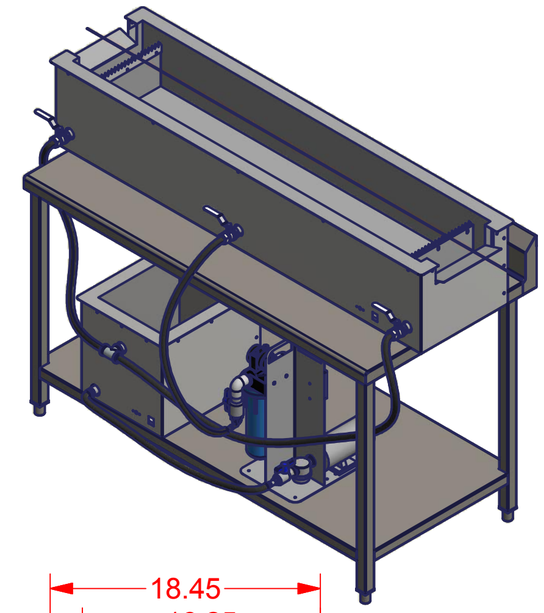

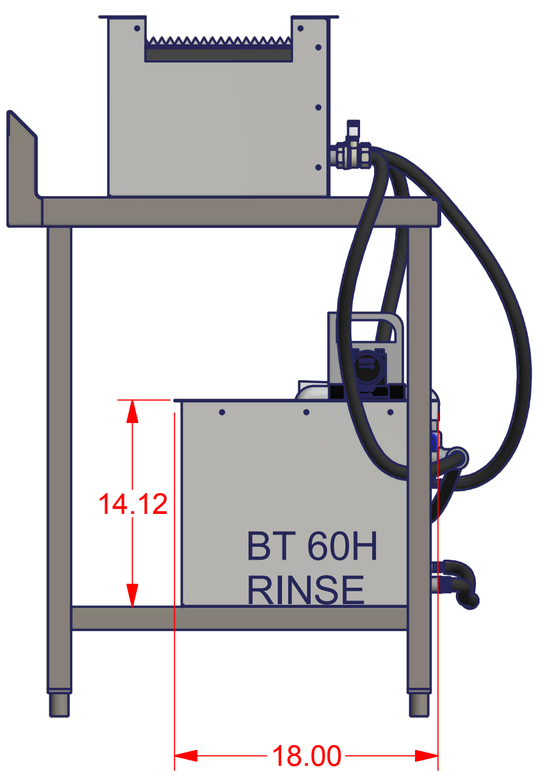

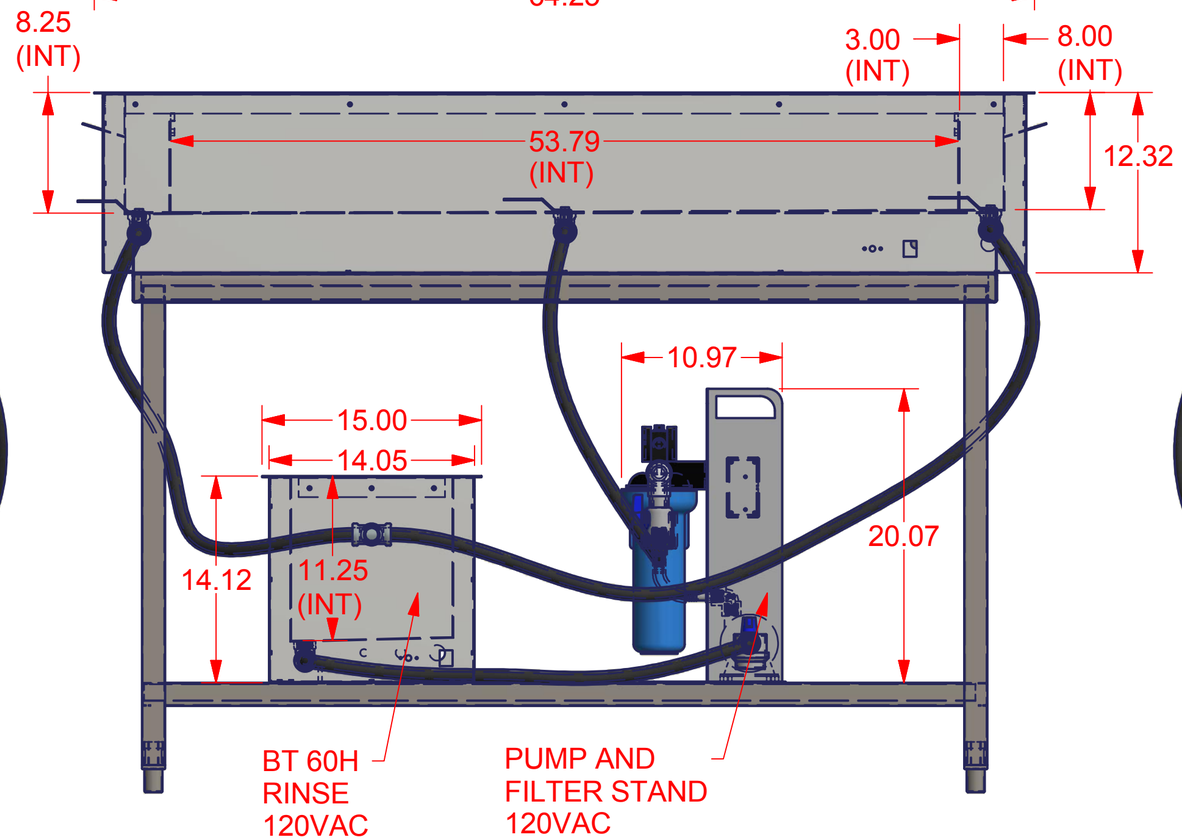

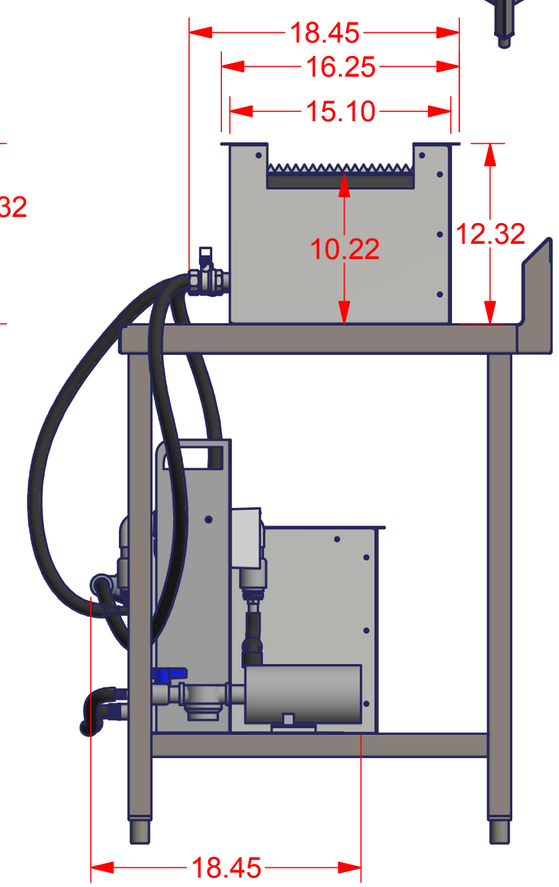

CUSTOMER APPROVAL
NAME (PRINTED):_____
NAME (SIGNED):_____
DATE:_____
RETURN FAX TO 815-232-2150

ULTRASONICPOWER CORPORATION

THE INFORMATION CONTAINED IN THIS DRAWING IS THE SOLE PROPERTY OF:
ULTRASONIC POWER CORPORATION
FREEPORT, IL 61032 USA
ANY REPRODUCTION IN PART OR WHOLE WITHOUT THE WRITTEN PERMISSION OF ULTRASONIC POWER IS PROHIBITED.

TOLERANCES (UNLESS SPECIFIED)
FRACTIONS +/- 1/64
.XX +/- .03
.XXX +/- .015
ANGLES +/- 1 DEG
BREAK ALL SHARP EDGES

DESCRIPTION
BT 6012 1500W/40kHz
WIRE CLEANING SYSTEM

MATERIAL	DWG #			
-	12C426			
FINISH	ENGR	DATE	SHEET	REV
-	JSW	02/27/17	1 OF 1	-